ICON Series Shower Base

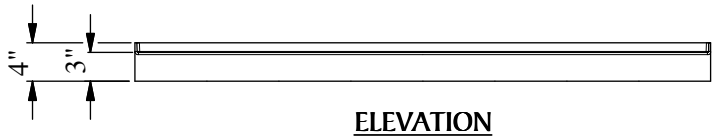

ELEVATION

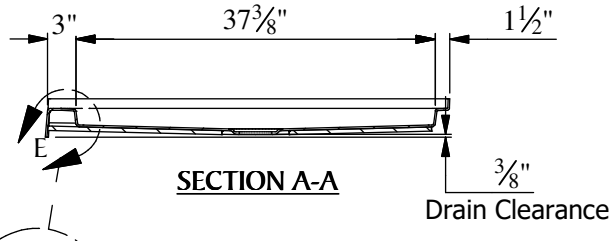

SECTION A-A

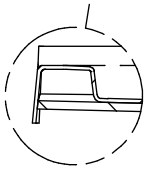

DETAIL E

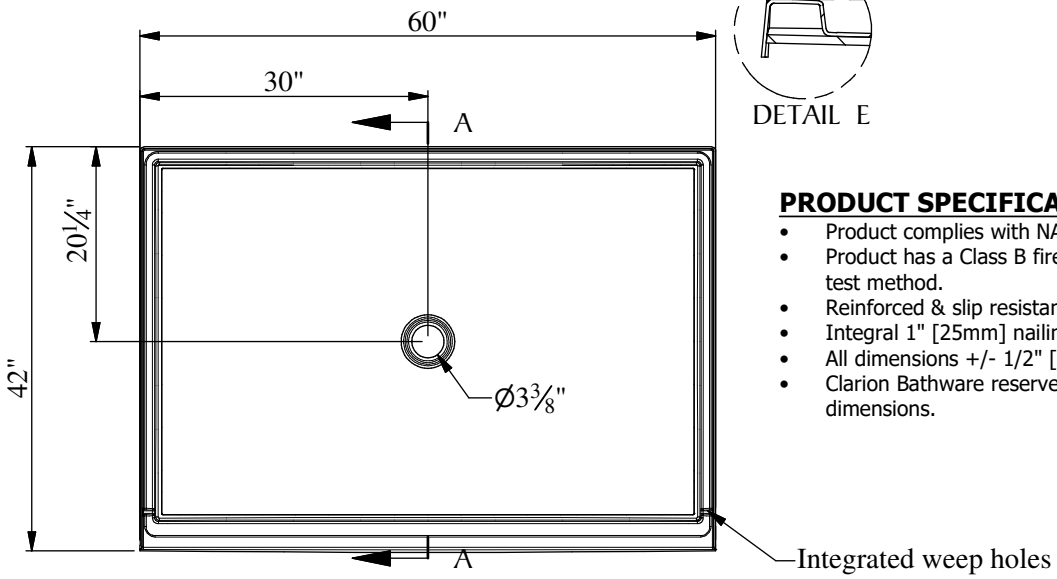

PLAN

PRODUCT SPECIFICATION:

- Product complies with NAHB, HUD UM-73A, and ANSI-Z124.1.2.
- Product has a Class B fire rating as determined by ASTM E-84 test method.
- Reinforced & slip resistant floor.
- Integral 1" [25mm] nailing flange.
- All dimensions +/- 1/2" [12.8mm]
- Clarion Bathware reserves the right to change design and/or dimensions.

SB6042

60" x 42" Shower Base w/ 3" Threshold & Center Drain

Clarion BATHWARE
44 Amsler Ave.
Shippenville, PA 16254

Phone: (814) 226-5374
Toll Free: (800) 576-9228
Fax: (814) 226-0730
www.clarionbathware.com

Mold Fabrication will not begin until approved drawing is received.
Standard mold production is (_____weeks) unless quoted otherwise.

Signatures For Approval: Date:

Customer:_____ _____

Clarion Engineer:_____ _____

Clarion SVP of Sales:_____ _____

DWG. #
SB6042 -CUT

By: CAL
Date: 6/1/2021

IMPOTANT NOTICE

Clarion bathware reserces the right to change the design and/or dimensions of its products at any time. This drawing may have been updaed since this publication was issued. Before placing an order for any product, refer to our website at www.clarionbathware.com to obtain the most current drawings for any products that you wish to purchase. Compare the date of revision of the drawing that you have with the one on the drawing on our website.
If you do not have internet access, please call your sales representative or Clarion Bathware's sales department at 1-800-576-9228.